OCTO
Enhancing Life

HONYA CO., LTD
www.reefoctopus.com

OCTO
Enhancing Life

eSsence 130

Instruction Manual

Dear Customer
Thank you for choosing Octo, a quality product manufactured by HONYA CO., LTD. In order for you to safely use our product for optimum results, please read this instruction prior to use. We would strongly suggest that you retain this Instruction for future reference.

Overview

- Loaded with Innovations.
- 10 over years of cumulative experience in the design and manufacturing of Skimmers,our S-130 are loaded with innovative human centric features.
- 16 Steps Water Outlet Adjustments to ensure that fine tuning of water output adjustments are possible.Design with special slanting cut grooves to ensure an even outflow which minimises splashes.
- 25 Angled Grooves + Apertures on the Bubble Plate for maximising constant micro air bubbling, with a Vortex Churn effect which extends reaction time.
- 4 Quick Releases at the Base Plate of the Skimmer allow User to quickly and conveniently access the inner body of the Skimmer, no Screwdriver needed.

Features & Benefits

- Twist & Lift Collection Cup for easy maintenance.
- Up to 12% Quieter with Integrated Silencer.
- Detachable Neck for easy access maintenance.
- Angled Grooves + Apertures for Vortex Churn, extends reaction time.
- Quick Release to conveniently access inner body.
- Angled Slanting cut grooves to ensure an even outflow.
- 16 Steps Water Output Adjustment.
- Sleek Wine-Shaped Smooth Cone Body.

Product Specification

Skimmer

Item No.	Product	Cup Diameter		Neck Diameter		Footprint		Height		Fit Pump	Tank Volume	
		mm	inch	mm	inch	mm	inch	mm	inch		L	US Gal
120501	S-130	140	5.5	60	2.4	210*175	8.2*6.8	520	20.5	AQ-1800S	600	158

Skimmer Pump

Product	Model No.	Wet/Dry	Air Intake				Power		Maximum Flow Rate			
			50Hz		60Hz		50Hz	60Hz	50Hz		60Hz	
			LPH	GPH	LPH	GPH	W	W	LPH	GPH	LPH	GPH
S-130	AQ-1800S	Both	480	127	511	135	10	11	530	140	530	140

Explosion Chart for essence 130

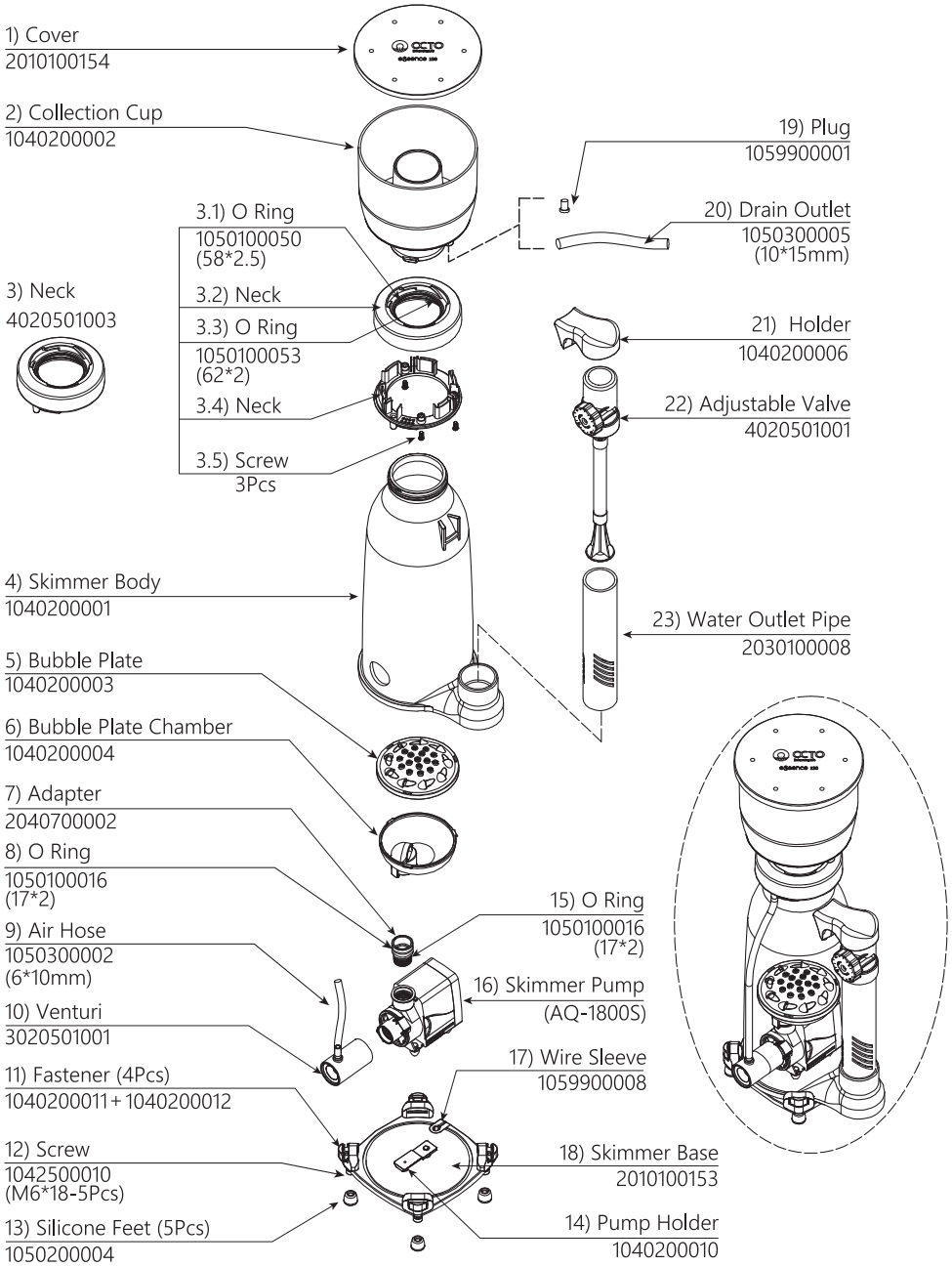

3+4) 4020501002
2+19) 4020501004
7+8+15+16) 110209-B

Assembly

STEP 1

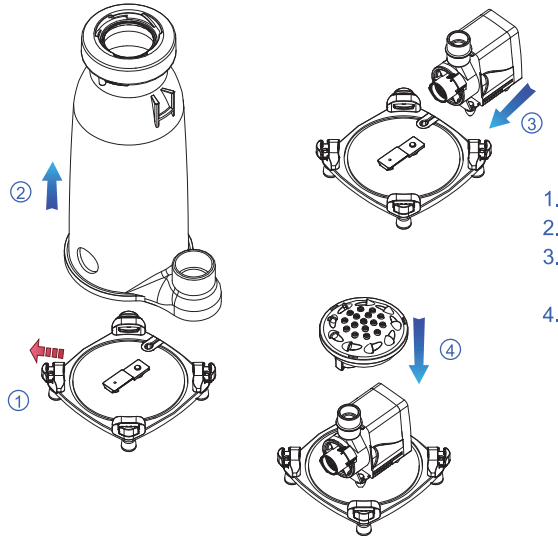

1. Release the 4 Fasteners
2. Detach the Skimmer Body
3. Insert the Pump onto the Skimmer Base
4. Attach the Bubble Plate and Chamber to the Skimmer Pump Outlet

STEP 2

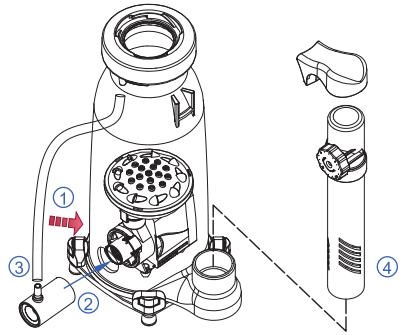

1. Place the Skimmer Body onto the Skimmer Base and lock Fasteners
2. Insert the Venturi to the Intake of the Pump
3. Insert the Air Hose
4. Assemble the Skimmer Outlet Pipe and Adjustable Valve

Assembly

STEP 3

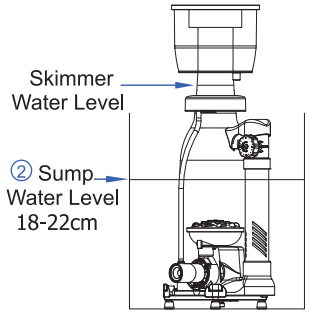

1. Position the Skimmer into the Sump
2. For optimal performance the water in the Sump should be between 18-22cm(7.1-8.7”)
3. Maintain consistence water level. Fluctuating water level will affect Skimmers’ performance

STEP 4

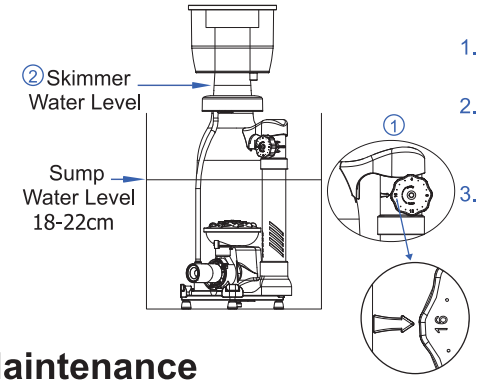

1. Ensure that the Adjustable Valve (part 22) is fully open, before starting Pump
2. Adjust the valve until the Skimmer water level is between the Skimmer’s Neck and just below the Collection Cup
3. New Skimmer will need a run-in period of 1-2 weeks before stabilising. During this time, please monitor water level to prevent overflowing into the Collection Cup

Maintenance

- Collection Cup(part 2): should be cleaned at least once every 7-10 days, depending on the organic waste collected.
- Skimmer Body: It is recommended that you clean the Skimmer Body once every 3-6 months. Clean and Rinse off with fresh water only.
- Neck: Remove and Clean Neck (part 3) every 2-3 months or when Air Intake is impeded. You will need a screw driver to remove this part,please also ensure all O rings are in place and not to over tighten the screws during re-assembling.
- Pump: It is recommended to clean the Pump once every 3-6 months. Clean the Impeller,and if necessary soak the Pump and Impeller in White Vinegar to dissolve stubborn calcium deposits.

Safety Tips

- Check the voltage shown on the label of the Pump, it must corresponds to the voltage of the main supply.
- Never allow the Pump to run dry.
- Do not touch the Socket with wet hands.
- Do not clean the Skimmer with any cleaning agents.

Watch our unboxing video https://youtu.be/rpEJdmlwZOA or scan

Warranty

Please refer to the below URL:
https://reefoctopus.com/services/warranty/

HONYA CO., LTD is committed to continuous product development, we hereby reserve the right to revise the product specifications or designs without prior notice.
For any further enquiry/assistance and latest product updates,
Please Visit at www.reefoctopus.com.

产品组装

STEP 4

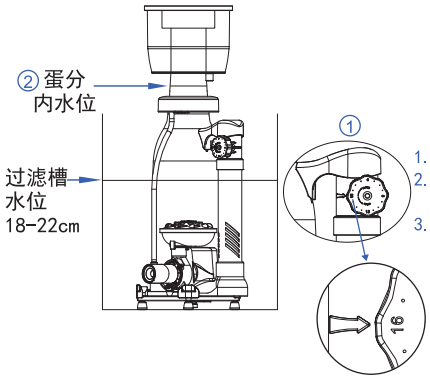

1. 在启动蛋分泵前，请将调节阀开到最大
2. 通过关小调节阀，使蛋分内的水位上升到盘头以上，收集杯底板以下
3. 新蛋分有一个磨合时间（一般在1-2周），在这期间，蛋分内的水位不建议设置很高；以免爆冲

维护

- 收集杯：建议每周至少清洗一次杯子；收集杯容易堆积污泥，会影响泡沫的爬升。
- 蛋分主体：建议每3到6个月对反应仓和出水管进行一次全面清洗。
- 盘头：盘头有消声器功能，建议每2到3个月清洗一次，以免堵塞，影响蛋分正常使用（盘头下面有三颗螺丝可以使用工具拆开）。
- 水泵：建议每三个月对水泵进行一次全面清洗；如有必要，可以使用白醋浸泡水泵和转子，清除钙沉淀。

注意事项

- 检查泵的电压频率是否匹配当地的电网。
- 禁止蛋分泵干转。
- 手带水的情况下，不要触碰电源插头。
- 不要使用任何化学试剂清洗蛋分。

制造商：深圳市泓亚水族设备制造有限公司

泓亚公司致力于持续的产品开发，我们将保留修改产品规格或设计的权利，恕不另行通知。

OCTO
Enhancing Life

essence 130

产品说明书

产品规格

产品编码	产品型号	匹配蛋分泵	泵功率	泵最大加气量	泵最大流量	杯子直径	产品占地	产品总高	出水管尺寸	最大适合缸
			W	LPH	LPH	mm	mm	mm	mm	L
120501	S-130	AQ-1800S	10	480	530	140	210*175	520	Φ40	600

产品总装图/配件清单 essence 130

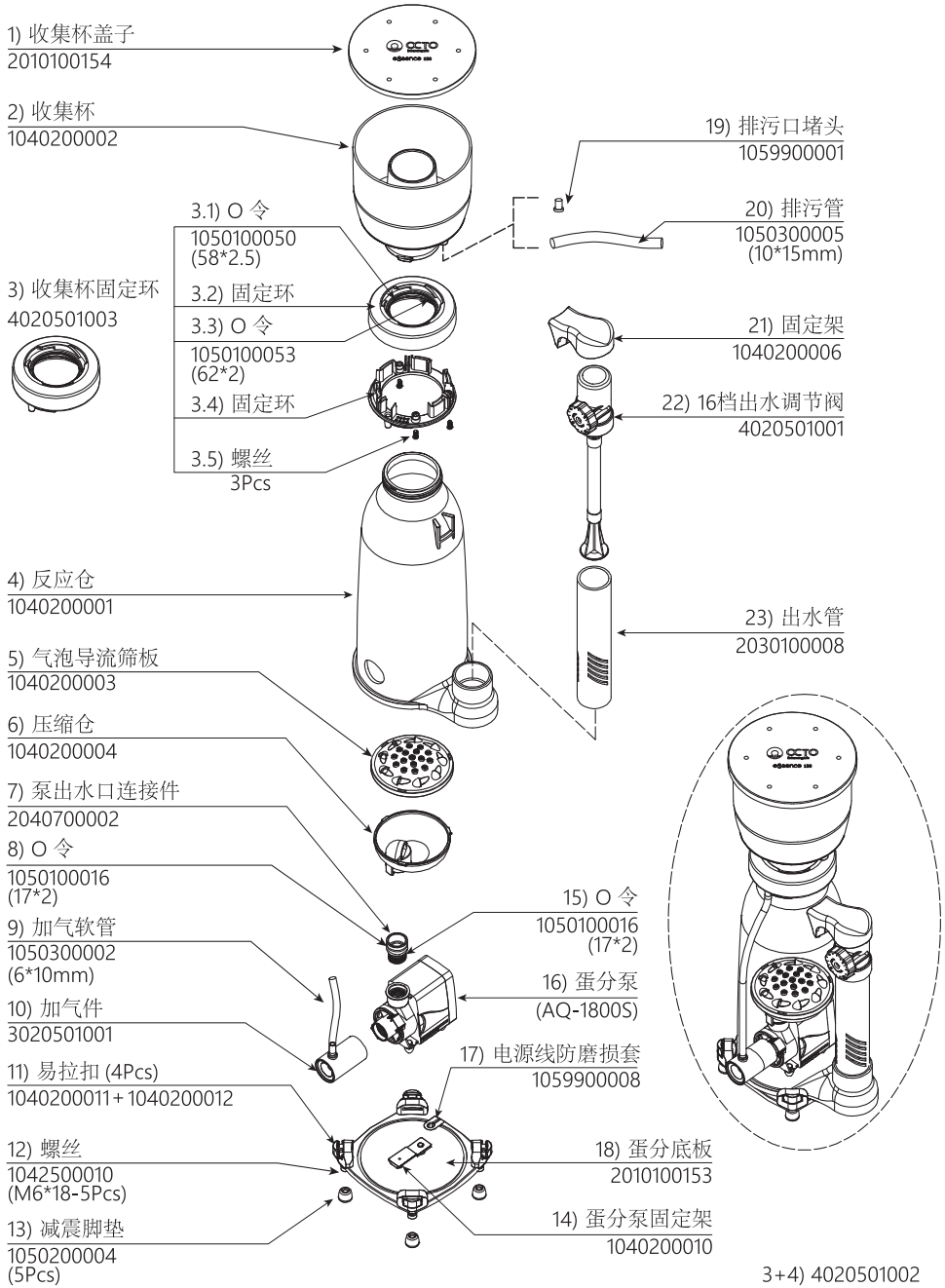

3+4) 4020501002
2+19) 4020501004
7+8+15+16) 110209-B

产品组装

STEP 1

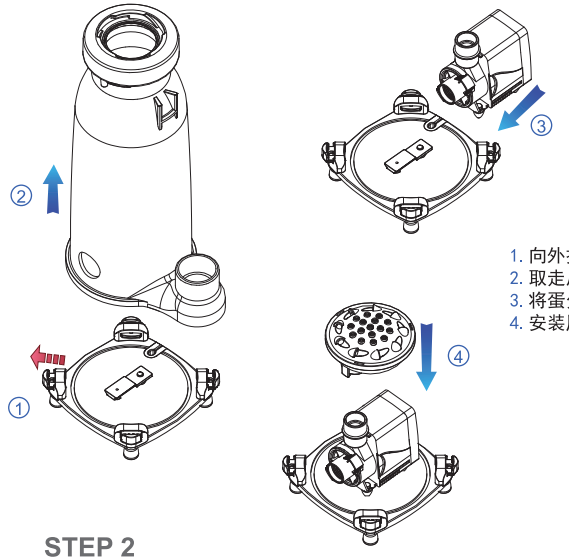

1. 向外拉开4个锁扣
2. 取走反应仓
3. 将蛋分泵滑动装入水泵固定架
4. 安装压缩仓和筛板

STEP 2

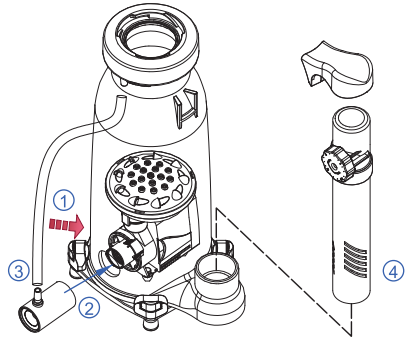

1. 将反应仓放在蛋分底板上；向内推锁扣
2. 安装加气件
3. 安装加气软管
4. 安装蛋分出水调节部分

STEP 3

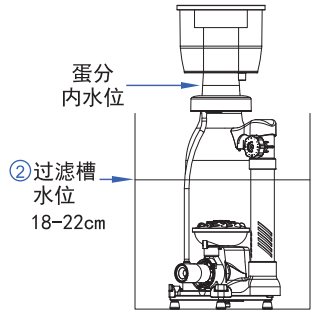

1. 将蛋分放入过滤槽，蛋分进水口不要贴在过滤槽的壁上不然吸不到水
2. 为了确保蛋分可以有效的工作，请设置过滤槽水位在18-22cm
3. 要控制过滤槽放置蛋分区域的水位，水位不可以波动；不然会影响蛋分的性能